Pioneer

SPH-PF97BT

RDS AV RECEIVER
AUTORADIO MULTIMÉDIA
RDS AV ALICI
RECEPTOR AV CON RDS

English
Français
Türkçe
Español

Quick start guide
Guide de démarrage rapide
Hızlı başlangıç Kılavuzu
Guía de iniciación rápida

Contents

Click a chapter. Page numbers refer to the numbers printed in the guide.

	Guide page
Quick Start and Installation Guide	1
Introduction	2
EU declaration of conformity	3
UK declaration of conformity	4
Precautions	5
Getting started and selecting a source	6
Radio and video playback	7
Audio playback and list search	8
Bluetooth and phone calls	9
Package contents and connection safety	10
Connectors and power cord	11
System cable and amplifier	12
USB connections for phones	13
Cameras and external video equipment	14
Receiver and GPS antenna installation	15
GPS antenna and microphone installation	16
Microphone adjustment and trademarks	17
Copyright	18

English

This guide is intended to guide you through the basic functions of this unit.
For details, please refer to the Operation manual stored on the website.
https://pioneer-car.eu/

Français

Ce guide a pour but de vous présenter les fonctions de base de cet appareil.
Pour les détails, veuillez vous reporter au mode d'emploi qui se trouve sur le site Web.
https://pioneer-car.eu/

Türkçe

Bu kılavuz, bu ünitenin temel işlevleri konusunda size rehberlik etmeyi amaçlamaktadır.
Ayrıntılar için lütfen web sitesinde bulunan Kullanım kılavuzuna bakın.
https://pioneer-car.eu/

Español

Se ha diseñado esta guía con la intención de guiarle a través de las funciones básicas de esta unidad.
Para los detalles, consulte el Manual de instrucciones que se encuentra almacenado en el sitio web.
https://pioneer-car.eu/

Declaration of Conformity with regard to the Radio Equipment Directive 2014/53/EU

Manufacturer:	EU Authorised Representative's & Importer:
Pioneer Corporation 28-8, Honkomagome 2-chome, Bunkyo-ku, Tokyo 113-0021, Japan	**Pioneer Europe NV** Haven 1087, Keetberglaan 1, B-9120 Melsele, Belgium/Belgique Salamanca, Wellington Street, Slough, SL1 1YP, UK **http://www.pioneer-car.eu**

[*] SPH-PF97BT

English:
Hereby, Pioneer declares that the radio equipment type [*] is in compliance with Directive 2014/53/EU.
The full text of the EU declaration of conformity is available at the following internet address:
http://www.pioneer-car.eu/compliance

Suomi:
Pioneer vakuuttaa, että radiolaitetyyppi [*] on direktiivin 2014/53/EU mukainen.
EU-vaatimustenmukaisuusvakuutuksen täysimittainen teksti on saatavilla seuraavassa internetosoitteessa:
http://www.pioneer-car.eu/compliance

Nederlands:
Hierbij verklaar ik, Pioneer, dat het type radioapparatuur [*] conform is met Richtlijn 2014/53/EU.
De volledige tekst van de EU-conformiteitsverklaring kan worden geraadpleegd op het volgende internetadres:
http://www.pioneer-car.eu/compliance

Français:
Le soussigné, Pioneer, déclare que l'équipement radioélectrique du type [*] est conforme à la directive 2014/53/UE.
Le texte complet de la déclaration UE de conformité est disponible à l'adresse internet suivante:
http://www.pioneer-car.eu/compliance

Svenska:
Härmed försäkrar Pioneer att denna typ av radioutrustning [*] överensstämmer med direktiv 2014/53/EU.
Den fullständiga texten till EU-försäkran om överensstämmelse finns på följande webbadress:
http://www.pioneer-car.eu/compliance

Dansk:
Hermed erklærer Pioneer, at radioudstyrstypen [*] er i overensstemmelse med direktiv 2014/53/EU.
EU-overensstemmelseserklæringens fulde tekst kan findes på følgende internetadresse:
http://www.pioneer-car.eu/compliance

Deutsch:
Hiermit erklärt Pioneer, dass der Funkanlagentyp [*] der Richtlinie 2014/53/EU entspricht.
Der vollständige Text der EU-Konformitätserklärung ist unter der folgenden Internetadresse verfügbar:
http://www.pioneer-car.eu/compliance

Ελληνικά:
Με την παρούσα ο/η Pioneer, δηλώνει ότι ο ραδιοεξοπλισμός [*] πληροί την οδηγία 2014/53/ΕΕ.
Το πλήρες κείμενο της δήλωσης συμμόρφωσης ΕΕ διατίθεται στην ακόλουθη ιστοσελίδα στο διαδίκτυο:
http://www.pioneer-car.eu/compliance

Italiano:
Il fabbricante, Pioneer, dichiara che il tipo di apparecchiatura radio [*] è conforme alla direttiva 2014/53/UE.
Il testo completo della dichiarazione di conformità UE è disponibile al seguente indirizzo Internet:
http://www.pioneer-car.eu/compliance

Español:
Por la presente, Pioneer declara que el tipo de equipo radioeléctrico [*] es conforme con la Directiva 2014/53/UE.
El texto completo de la declaración UE de conformidad está disponible en la dirección Internet siguiente:
http://www.pioneer-car.eu/compliance

Português:
O(a) abaixo assinado(a) Pioneer declara que o presente tipo de equipamento de rádio [*] está em conformidade com a Diretiva 2014/53/UE.
O texto integral da declaração de conformidade está disponível no seguinte endereço de Internet:
http://www.pioneer-car.eu/compliance

Čeština:
Tímto Pioneer prohlašuje, že typ rádiového zařízení [*] je v souladu se směrnicí 2014/53/EU.
Úplné znění EU prohlášení o shodě je k dispozici na této internetové adrese:
http://www.pioneer-car.eu/compliance

Eesti:
Käesolevaga deklareerib Pioneer, et käesolev raadioseadme tüüp [*] vastab direktiivi 2014/53/EL nõuetele.
ELi vastavusdeklaratsiooni täielik tekst on kättesaadav järgmisel internetiaadressil:
http://www.pioneer-car.eu/compliance

Magyar:
Pioneer igazolja, hogy a [*] típusú rádióberendezés megfelel a 2014/53/EU irányelvnek.
Az EU-megfelelőségi nyilatkozat teljes szövege elérhető a következő internetes címen:
http://www.pioneer-car.eu/compliance

Latviešu valoda:
Ar šo Pioneer deklarē, ka radioiekārta [*] atbilst Direktīvai 2014/53/ES.
Pilns ES atbilstības deklarācijas teksts ir pieejams šādā interneta vietnē:
http://www.pioneer-car.eu/compliance

Lietuvių kalba:
Aš, Pioneer, patvirtinu, kad radijo įrenginių tipas [*] atitinka Direktyvą 2014/53/ES.
Visas ES atitikties deklaracijos tekstas prieinamas šiuo interneto adresu:
http://www.pioneer-car.eu/compliance

Malti:
B'dan, Pioneer, niddikjara li dan it-tip ta' tagħmir tar-radju [*] huwa konformi mad-Direttiva 2014/53/UE.
It-test kollu tad-dikjarazzjoni ta' konformità tal-UE huwa disponibbli f'dan l-indirizz tal-Internet li ġej:
http://www.pioneer-car.eu/compliance

Slovenčina:
Pioneer týmto vyhlasuje, že rádiové zariadenie typu [*] je v súlade so smernicou 2014/53/EÚ.
Úplné EÚ vyhlásenie o zhode je k dispozícii na tejto internetovej adrese:
http://www.pioneer-car.eu/compliance

Slovenščina:
Pioneer potrjuje, da je tip radijske opreme [*] skladen z Direktivo 2014/53/EU.
Celotno besedilo izjave EU o skladnosti je na voljo na naslednjem spletnem naslovu:
http://www.pioneer-car.eu/compliance

Română:
Prin prezenta, Pioneer declară că tipul de echipamente radio [*] este în conformitate cu Directiva 2014/53/UE.
Textul integral al declarației UE de conformitate este disponibil la următoarea adresă internet:
http://www.pioneer-car.eu/compliance

български:
С настоящото Pioneer декларира, че този тип радиосъоръжение [*] е в съответствие с Директива 2014/53/ЕС.
Цялостният текст на ЕС декларацията за съответствие може да се намери на следния интернет адрес:
http://www.pioneer-car.eu/compliance

Polski:
Pioneer niniejszym oświadcza, że typ urządzenia radiowego [*] jest zgodny z dyrektywą 2014/53/UE.
Pełny tekst deklaracji zgodności UE jest dostępny pod następującym adresem internetowym:
http://www.pioneer-car.eu/compliance

Norsk:
Herved Pioneer erklærer at radioutstyr type [*] er i samsvar med direktiv 2014/53/EU.
Den fullstendige teksten i EU-samsvarserklæringen er tilgjengelig på følgende internettadresse:
http://www.pioneer-car.eu/compliance

Íslenska:
Hér með Pioneer lýsir yfir að tegund þráðlausan búnað [*] er í samræmi við tilskipun 2014/53/ESB.
The fullur texti af ESB-samræmisyfirlýsingu er í boði á eftirfarandi veffangi:
http://www.pioneer-car.eu/compliance

Hrvatski:
Pioneer ovime izjavljuje da je radijska oprema tipa [*] u skladu s Direktivom 2014/53/EU.
Cjeloviti tekst EU izjave o sukladnosti dostupan je na sljedećoj internetskoj adresi:
http://www.pioneer-car.eu/compliance

Türk:
Burada. Pioneer radyo ekipmani turunun [*] 2014/53/EU direktiflerine uyumlu oldugunu beyan eder.

Avrupa uyumluluk beyaninin tam metni belirtilen internet sitesinde mevcuttur:
http://www.pioneer-car.eu/compliance

English
Bluetooth®:
Output power ..... + 4 dBm Max. (power class 2)
Frequency band(s) ..... 2 402 - 2 480 MHz
Wireless LAN:
Output power ..... +13 dBm Max.
Frequency band(s) ..... 5 735 - 5 815 MHz

Français
Bluetooth®:
Puissance de sortie ..... + 4 dBm max. (Classe électrique 2)
Bande(s) de fréquences ... 2 402 - 2 480 MHz
LAN sans fil:
Puissance de sortie ..... +13 dBm max.
Bande(s) de fréquences ... 5 735 - 5 815 MHz

Declaration of Conformity with regard to the Radio Equipment Regulations 2017

Manufacturer:	UK Authorised Representative's & Importer:
Pioneer Corporation 28-8, Honkomagome 2-chome, Bunkyo-ku, Tokyo 113-0021, Japan	**Pioneer Europe NV** Haven 1087, Keetberglaan 1, B-9120 Melsele, Belgium/Belgique Salamanca, Wellington Street, Slough, SL1 1YP, UK **http://www.pioneer-car.eu**

[*] SPH-PF97BT

Hereby, Pioneer declares that the radio equipment type [*] is in compliance with UK SI 2017 No. 1206.
The full text of the UK declaration of conformity is available at the following internet address:
http://www.pioneer-car.eu/compliance

Precaution

Certain country and government laws may prohibit or restrict the placement and use of this product in your vehicle. Please comply with all applicable laws and regulations regarding the use, installation and operation of this product.



If you want to dispose this product, do not mix it with general household waste. There is a separate collection system for used electronic products in accordance with legislation that requires proper treatment, recovery and recycling.

Private households in the member states of the EU, in Switzerland and Norway may return their used electronic products free of charge to designated collection facilities or to a retailer (if you purchase a similar new one).
For countries not mentioned above, please contact your local authorities for the correct method of disposal.
By doing so you will ensure that your disposed product undergoes the necessary treatment, recovery and recycling and thus prevent potential negative effects on the environment and human health.

⚠ WARNING

Slots and openings in the cabinet are provided for ventilation to ensure reliable operation of the product, and to protect it from overheating. To prevent fire hazard, the openings should never be blocked or covered with items (such as papers, floor mat, cloths).

To ensure safe driving

⚠ WARNING

- **LIGHT GREEN LEAD AT POWER CONNECTOR IS DESIGNED TO DETECT PARKED STATUS AND MUST BE CONNECTED TO THE POWER SUPPLY SIDE OF THE HANDBRAKE SWITCH. IMPROPER CONNECTION OR USE OF THIS LEAD MAY VIOLATE APPLICABLE LAW AND MAY RESULT IN SERIOUS INJURY OR DAMAGE.**
- **To avoid the risk of damage and injury and the potential violation of applicable laws, this product is not for use with a video image that is visible to the driver.**
- In some countries the viewing of video image on a display inside a vehicle even by persons other than the driver may be illegal. Where such regulations apply, they must be obeyed.

If you attempt to watch video image while driving, the warning **"Viewing of front seat video source while driving is strictly prohibited."** will appear on the screen. To watch video image on this display, stop the vehicle in a safe place and apply the handbrake. Please keep the brake pedal pushed down before releasing the handbrake.

English

Getting started

Meanings of symbols used in this manual

Touch Touch and slide Touch and hold

What's What

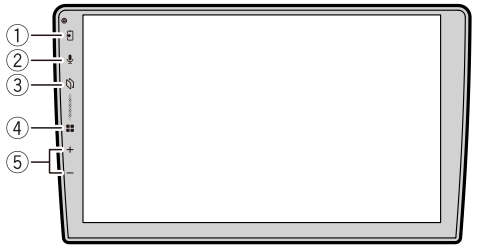

①		**Display the Apple CarPlay phone screen when Apple CarPlay is activated** **Display the phone menu screen when Android Auto™ or hands-free phoning is activated** **Start searching screen when the device is not connected** **Go to the device select screen when the device is already connected**
②		**Activate the voice recognition mode** **Display the device search or select screen**
③		**Display the application screen** **Display the device search or select screen**
④		**Display the home menu screen** **Power off**
⑤	VOL (+/-)	**Adjust the volume**

Selecting the source

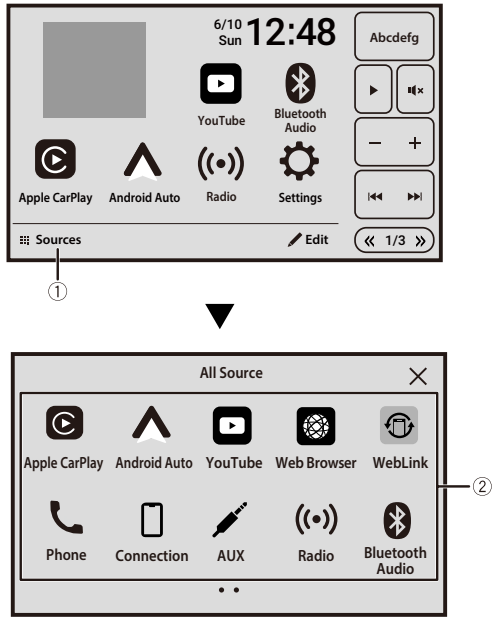

①	**Display all sources/applications**

②	Select a source Display hidden source

Tuner operation

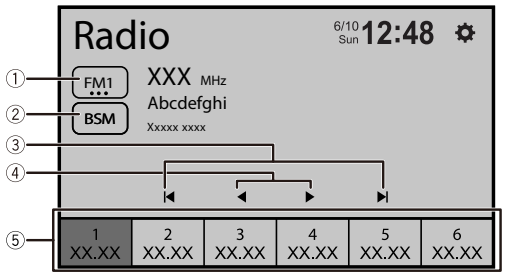

①	Select a band
②	Store the strongest broadcast frequencies
③	Start seek turning
④	Tune into the next station
⑤	Recall the preset channel stored to a key from memory Store the current broadcast frequency to a key

Moving images operation

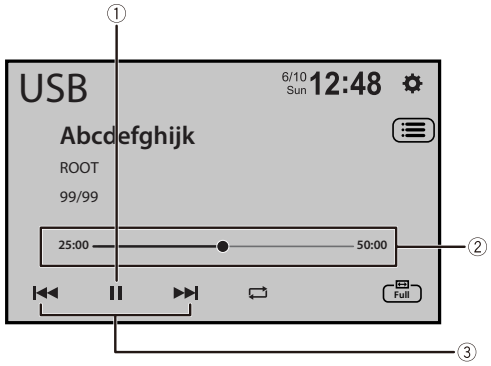

①	Pause and start playback
②	Change the playback point
③	Select the previous file or the next file Perform fast forward or fast reverse

English

Audio operation

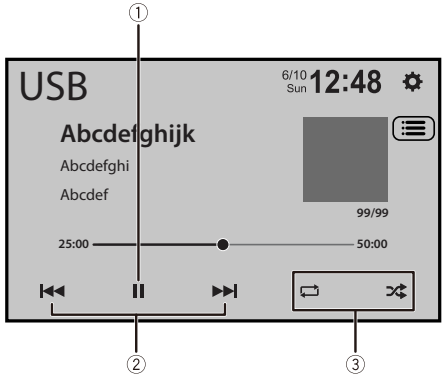

①	**Pause and start playback**
②	**Select the previous file or the next file** **Perform fast forward or fast reverse**
③	**Set the function for playing audio**

List search operation

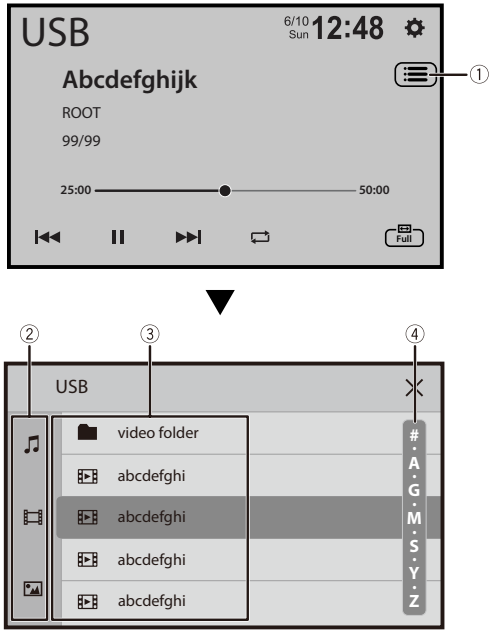

①	**Display the playlist screen**
②	**Select the media file types**
③	**Select a list title or folder that you want to play**
④	**Scroll the list**

Bluetooth® connection

1 [Sources] . ➡ [Yes] or .

2 the Bluetooth device name.

Bluetooth telephone operation



①	Enter the phone number directly
②	Switch to the phone book mode
③	Switch to the call history list
④	Make an outgoing call

English

Checking supplied items

This product/ connection cables/ installation parts

- This product (×1)

- Power cord (×1)
- System cable (×1)
- Pre out cord (×1)
- SWC/Back Camera cord (×1)
- AUX IN cord (×1)
- USB cable (×1)

- Binding head screw (3 mm × 8 mm, Silver)(×4)

GPS aerial/installation parts

- GPS aerial (×1)
- Double-sided tape (×1)
- Clamps (×3)

Microphone/ installation parts

- Microphone (×1)
- Double-sided tape (×1)

Other items

- Manual(s) (×1)
- Warranty Card (×1)

Connection

Precautions

Your new product and this manual

- Do not operate this product, any applications, or the rear view camera option (if purchased) if doing so will divert your attention in any way from the safe operation of your vehicle. Always observe safe driving rules and follow all existing traffic regulations. If you experience difficulty in operating this product, pull over, park your vehicle in a safe location and apply the handbrake before making the necessary adjustments.
- Do not install this product where it may (i) obstruct the driver's vision, (ii) impair the performance of any of the vehicle's operating systems of safety features, including airbags, hazard lamp buttons, or (iii) impair the driver's ability to safely operate the vehicle. In some cases, it may not be possible to install this product because of the vehicle type or the shape of the vehicle interior.

Important safeguards

⚠ **WARNING**

Pioneer does not recommend that you install this product yourself. This product is designed for professional installation only. We recommend that only authorised Pioneer service personnel, who have special training and experience in mobile electronics, set up and install this product. NEVER SERVICE THIS PRODUCT YOURSELF. Installing or servicing this product and its connecting cables may expose you to the risk of electric shock or other hazards, and can cause damage to this product that is not covered by warranty.

Precautions before connecting the system

⚠ **CAUTION**

- Secure all wiring with cable clamps or electrical tape. Do not allow any bare wiring to remain exposed.
- Do not directly connect the yellow lead of this product to the vehicle battery. If the lead is directly connected to the battery, engine vibration may eventually cause the insulation to fail at the point where the wire passes from the passenger compartment into the engine compartment. If the yellow lead's insulation tears as a result of contact with metal parts, short-circuiting can occur, resulting in considerable danger.
- It is extremely dangerous to allow cables to become wound around the steering column or gearstick. Be sure to install this product, its cables, and wiring away in such so that they will not obstruct or hinder driving.
- Make sure that the cables and wires will not interfere with or become caught in any of the vehicle's moving parts, especially the steering wheel, gearstick, handbrake, sliding seat tracks, doors, or any of the vehicle's controls.
- Do not route wires where they will be exposed to high temperatures. If the insulation heats up, wires may become damaged, resulting in a short circuit or malfunction and permanent damage to the product.
- Do not shorten any leads. If you do, the protection circuit (fuse holder, fuse resistor or filter, etc.) may fail to work properly.
- Never feed power to other electronic products by cutting the insulation of the power supply lead of this product and tapping into the lead. The current capacity of the lead will be exceeded, causing overheating.

Before installing this product

- Use this product with a 12-volt battery and negative earthing only. Failure to do so may result in a fire or malfunction.
- To avoid shorts in the electrical system, be sure to disconnect the (–) battery cable before installation.

To prevent damage

⚠ **WARNING**

- When speaker output is used by 4 channels , use speakers over 50 W (Maximum input power) and between 4 Ω to 8 Ω (impedance value). Do not use 1 Ω to 3 Ω speakers for this unit.

- The black lead is earth. Please earth this lead separately from the earth of high current products such as power amps. Do not earth more than one product together with the earth from another product. For example, you must separately earth any amp unit away from the earth of this product. Connecting earths together can cause a fire and/or damage the products if their earths became detached.
- When replacing the fuse, be sure to only use a fuse of the rating prescribed on this product.
- This product cannot be installed in a vehicle without ACC (accessory) position on the ignition switch. Consult with your nearest dealer if your vehicle is keyless.
- To avoid short-circuiting, cover the disconnected lead with insulating tape. It is especially important to insulate all unused speaker leads, which if left uncovered may cause a short circuit.
- For connecting a power amp or other devices to this product, refer to the manual for the product to be connected.
- The graphical symbol ⎓ placed on the product means direct current.

Notice for the blue/white lead

- When the ignition switch is turned on (ACC ON), a control signal is output through the blue/white lead. Connect to an external power amp's system remote control terminal, the auto-aerial relay control terminal, or the aerial booster power control terminal (max. 300 mA 12 V DC). The control signal is output through the blue/white lead, even if the audio source is switched off.

This product

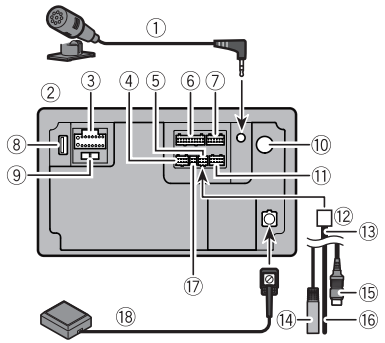

① Microphone 3 m
② This product
③ Power supply
④ Connector 4 (Connected to CAN bus)
⑤ Connector 1 (**REAR VIEW CAMERA IN/ MUTE/STEERING WHEEL CONTROL**)
⑥ Connector 3 (**SYSTEM REMOTE CONTROL/PARKING BRAKE/ CARSPEED SIGNAL INPUT**)
⑦ Pre out suppy
⑧ USB port
⑨ Fuse
⑩ Aerial jack
⑪ Not used.
⑫ To connector 1
⑬ SWC/Back Camera cord
⑭ Wired remote input (**STEERING WHEEL CONTROL**)
Hard-wired remote control adapter can be connected (sold separately).
⑮ Brown (**REAR VIEW CAMERA IN**)
⑯ Yellow/black (**MUTE**)
⑰ Connector 2 (**AUX IN**)
⑱ GPS aerial 3.55 m

Power cord

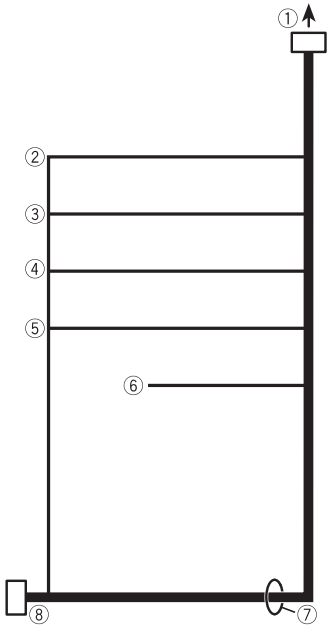

① To power supply
② Yellow
Connect to the constant 12 V supply terminal.
③ Red
Connect to terminal controlled by ignition switch (12 V DC).
④ Orange/white
To lighting switch terminal.
⑤ Black (earth)
To vehicle (metal) body.
⑥ Violet/white
Of the two lead wires connected to the back lamp, connect the one in which the voltage changes when the gear shift is in the REVERSE (R) position. This connection enables the unit to sense whether the car is moving forwards or backwards.
⑦ Speaker leads
White: Front left + or high range left +
White/black: Front left – or high range left –
Grey: Front right + or high range right +
Grey/black: Front right – or high range right –
Green: Rear left + or middle range left +
Green/black: Rear left – or middle range left –
Violet: Rear right + or middle range right +
Violet/black: Rear right – or middle range right –
⑧ ISO connector
In some vehicles, the ISO connector may be divided into two. In this case, be sure to connect to both connectors.

English

Syetem cable

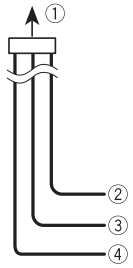

① To connector 3
② Pink
Car speed signal input
③ Blue/white
Connect to system control terminal of the power amp (max. 300 mA 12 V DC).
④ Light green
Used to detect the ON/OFF status of the handbrake. This lead must be connected to the power supply side of the handbrake switch.
If this connection is made incorrectly or omitted, certain functions of this product will be unusable.

NOTES

- The position of the speed detection circuit and the position of the handbrake switch vary depending on the vehicle model. For details, consult your authorised Pioneer dealer or an installation professional.
- The position of the handbrake switch depends on the vehicle model. For details, consult the vehicle Owner's Manual or dealer.

Power amp (sold separately)

Important
The speaker leads are not used when this connection is in use.

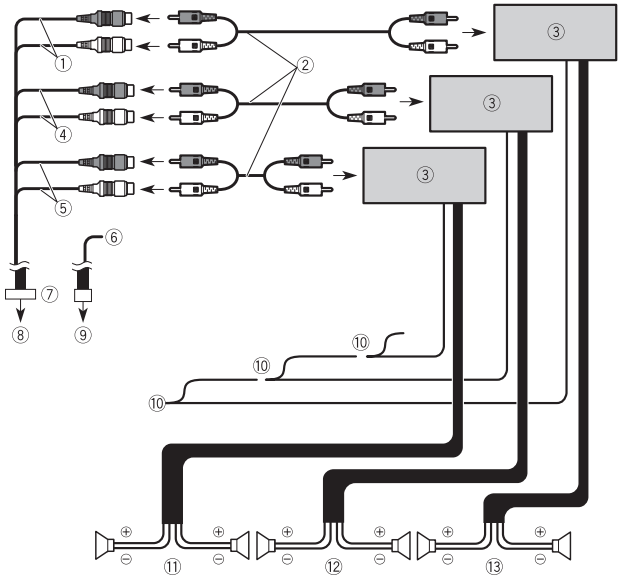

① Subwoofer output (**SUBWOOFER OUTPUT**) 23 cm (STD)
Low range output (NW)
② RCA cable (sold separately)
③ Power amp
④ Front output (**FRONT OUTPUT**) 15 cm (STD)
High range output (NW)
⑤ Rear output (**REAR OUTPUT**) 15 cm (STD)
Middle range output (NW)
⑥ Yellow/black (MUTE)
If you use an equipment with Mute function, wire this lead to the Audio Mute lead on that equipment. If not, keep the Audio Mute lead free of any connections.
⑦ Pre out cord
⑧ To pre out supply
⑨ To connector 1
⑩ System remote control
Connect to Blue/white cable (max. 300 mA 12 V DC).
⑪ Rear speaker (STD)

Middle range speaker (NW)
⑫ Front speaker (STD)
High range speaker (NW)
⑬ Subwoofer (STD)
Low range speaker (NW)

NOTE

Select the appropriate speaker mode between standard mode (STD) and network mode (NW). For details, refer to the Operation Manual.

iPhone and smartphone

NOTES

- For details on how to connect an external device using a separately sold cable, refer to the manual for the cable.
- For details concerning the connection and operations of iPhone or smartphone, refer to the Operation Manual.

iPhone

Connecting via the USB port

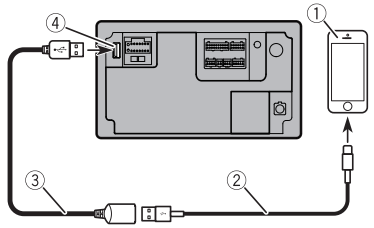

① iPhone
② USB interface cable for iPhone (sold separately)
③ USB cable 1.5 m
④ USB port

Smartphone (Android™ device)

Connecting via the USB port

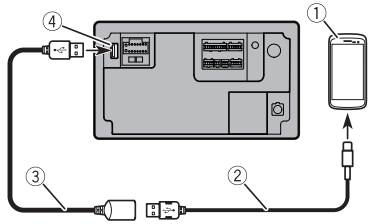

① Smartphone
② USB interface cable for Android device (sold separately)
③ USB cable 1.5 m
④ USB port

English

Camera

About rear view camera

When you use the rear view camera, the rear view image is automatically switched from the video by moving the gearstick to **REVERSE (R)**. **Camera View** mode also allows you to check what is behind you while driving.

⚠ WARNING

- USE INPUT ONLY FOR REVERSE OR MIRROR IMAGE REAR VIEW CAMERA. OTHER USE MAY RESULT IN INJURY OR DAMAGE.
- THE SECOND CAMERA INPUT IS AVAILABLE TO SUPPLEMENT THE DRIVER'S VIEW BUT IS NOT A SUBSTITUTE FOR THE DRIVER'S CAREFUL ATTENTION, AND PIONEER ACCEPTS NO RESPONSIBILITY FOR LOSS OR DAMAGE IN CONNECTION WITH ITS USE. IT IS THE DRIVER'S RESPONSIBILITY TO BE AWARE OF SURROUNDINGS AND CONDITIONS AT ALL TIMES WHILE OPERATING A VEHICLE, INCLUDING CHECKING REARVIEW AND/OR SIDE MIRRORS AS NEEDED WHEN REVERSING.

⚠ CAUTION

- The screen image may appear reversed.
- With the rear view camera you can keep an eye on trailers, or back into a tight parking spot. Do not use for entertainment purposes.
- Objects in rear view may appear closer or more distant than in reality.
- The image area of full-screen images displayed while backing or checking the rear of the vehicle may differ slightly.

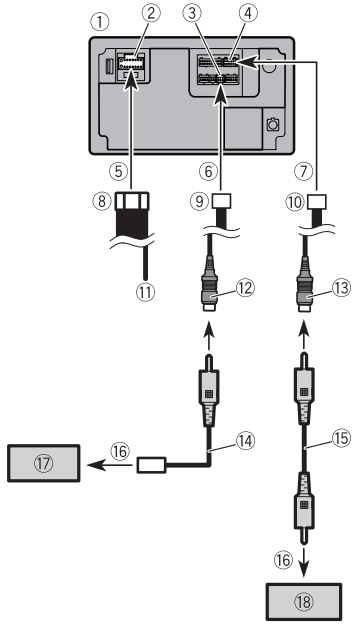

① This product
② Power supply
③ Connector 1
④ Pre out supply
⑤ To power supply
⑥ To connector 1
⑦ To pre out supply
⑧ Power cord
⑨ SWC/Back Camera cord
⑩ Pre out cord
⑪ Violet/white (**REVERSE-GEAR SIGNAL INPUT**)
⑫ Brown (**REAR VIEW CAMERA IN**) 23 cm
Refer to Power cord on page 11.
⑬ Yellow (**SECOND CAMERA INPUT**)

NOTE

Do not use the second camera for any purpose other than driving assistance.

⑭ RCA power supply cable (sold separately)
⑮ RCA cable (sold separately)
⑯ To video output
⑰ Rear view camera (sold separately)
⑱ View camera (sold separately)

NOTES

- Connect only the rear view camera to **REAR VIEW CAMERA IN**. Do not connect any other equipment.
- Some appropriate settings are required to use rear view cameras. For details, refer to the Operation Manual.

External video component and the display

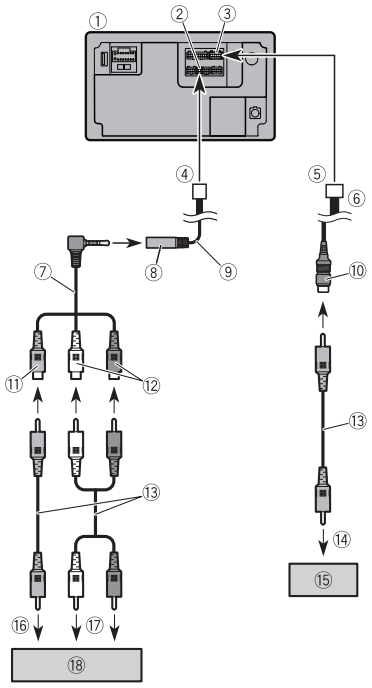

① This product
② Connector 2
③ Pre out supply
④ To connector 2
⑤ To pre out supply
⑥ Pre out cord
⑦ Mini-jack AV cable (sold separately)
⑧ AUX input (**AUX IN**)
⑨ AUX IN cord 15 cm
⑩ Yellow (**REAR MONITOR OUT**)
⑪ Yellow
⑫ Red, white
⑬ RCA cables (sold separately)
⑭ To video input
⑮ Rear display with RCA input jacks
⑯ To video output
⑰ To audio outputs
⑱ External video component (sold separately)

⚠ WARNING

NEVER install the rear display in a location that enables the driver to watch the video source while driving.

This product's rear video output is for connection of a display to enable passengers in the rear seats to watch the video source.

⚠ CAUTION

Be sure to use a mini-jack AV cable (sold separately) for wiring. If you use other cables, the wiring position might differ resulting in disturbed images and sounds.

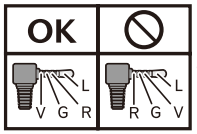

L : Left audio (White)
R : Right audio (Red)
V : Video (Yellow)
G : Earth

Installation

Precautions before installation

⚠ **CAUTION**

- Never install this product in places where, or in a manner that:
  – Could injure the driver or passengers if the vehicle stops suddenly.
  – May interfere with the driver's operation of the vehicle, such as on the floor in front of the driver's seat, or close to the steering wheel or gearstick.
- To ensure proper installation, be sure to use the supplied parts in the manner specified. If any parts are not supplied with this product, use compatible parts in the manner specified after you have the part compatibility checked by your dealer. If parts other than supplied or compatible ones are used, they may damage internal parts of this product or they may work loose and the product may become detached.
- Do not install this product where it may (i) obstruct the driver's vision, (ii) impair the performance of any of the vehicle's operating systems or safety features, including airbags, hazard lamp buttons or (iii) impair the driver's ability to safely operate the vehicle.
- Never install this product in front of or next to the place in the dashboard, door, or pillar from which one of your vehicle's airbags would deploy. Please refer to your vehicle's owner's manual for reference to the deployment area of the frontal airbags.

Before installing

- Consult with your nearest dealer if installation requires drilling holes or other modifications of the vehicle.
- Before making a final installation of this product, temporarily connect the wiring to confirm that the connections are correct and the system works properly.

Installation notes

- Do not install this product in places subject to high temperatures or humidity, such as:
  – Places close to a heater, vent or air conditioner.
  – Places exposed to direct sunlight, such as on top of the dashboard.
  – Places that may be exposed to rain, such as close to the door or on the vehicle's floor.
- Install this product horizontally on a surface within 0 to 30 degrees tolerance.

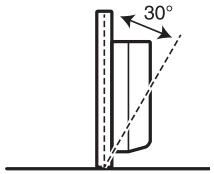

- When installing, to ensure proper heat dispersal when using this unit, make sure you leave ample space behind the rear panel and wrap any loose cables so they are not blocking the vents.

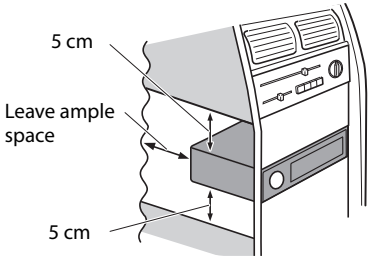

Installing this product to the cluster panel

Set the product so that the screw holes on the back of this product are aligned with the screw holes on the cluster panel, and then tighten the screws from the back to install.

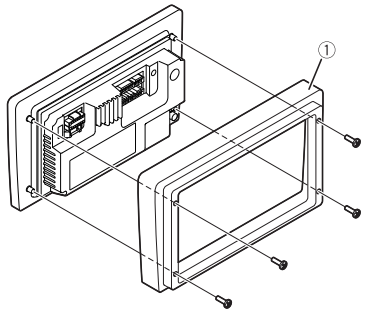

① Cluster panel

NOTE

The shape of the cluster panel differs depending on the vehicle model.

Installing the GPS aerial

⚠ **CAUTION**

Do not cut the GPS aerial lead to shorten it or use an extension to make it longer. Altering the aerial cable could result in a short circuit or malfunction and permanent damage to this product.

Installation notes

- The aerial should be installed on a level surface where radio waves will be blocked as little as possible. Radio waves cannot be received by the aerial if reception from the satellite is blocked.

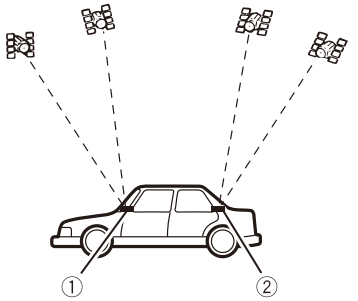

① Dashboard
② Rear shelf

- Take care not to pull the aerial lead when removing the GPS aerial. The lead may become detached.
- Do not paint the GPS aerial, as this may affect its performance.

English

When installing the aerial inside the vehicle (on the dashboard or rear shelf)

⚠ WARNING

Do not install the GPS aerial over any sensors or vents on the dashboard of the vehicle, as doing so may interfere with the proper functioning of such sensors or vents and may compromise the ability of the GPS aerial to properly and securely affix to the dashboard.

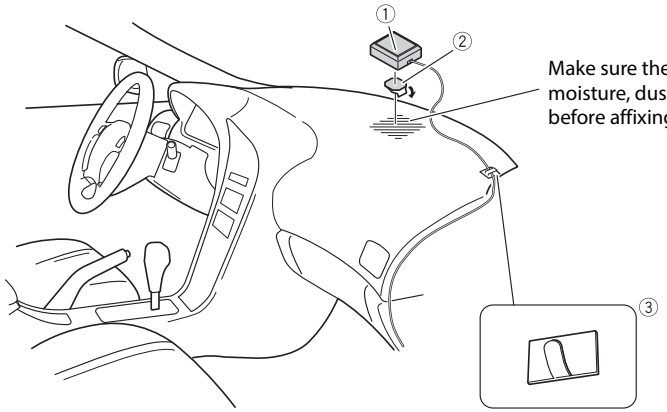

Make sure the surface is free of moisture, dust, grime, oil, etc., before affixing the GPS aerial.

① GPS aerial
② Double-sided tape
③ Clamps
Use clamps to secure the lead where necessary inside the vehicle.

NOTES

- Affix the GPS aerial on the surface as level as possible where the GPS aerial faces the window.
- Some models use window glass that does not allow signals from GPS satellites to pass through. On such models, install the GPS aerial on the outside of the vehicle.

Installing the microphone

- Install the microphone in a place where its direction and distance from the driver make it easiest to pick up the driver's voice.
- Be sure to turn off (ACC OFF) the product before connecting the microphone.
- Depending on the vehicle model, the microphone cable length may be too short when you mount the microphone on the sun visor. In such cases, install the microphone on the steering column.

Mounting on the sun visor

1 Fit the microphone lead into the groove.

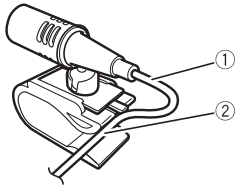

① Microphone lead
② Groove

2 Attach the microphone clip to the sun visor.

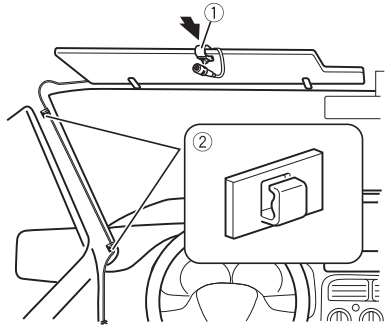

① Microphone clip
② Clamps
Use separately sold clamps to secure the lead where necessary inside the vehicle.

Install the microphone on the sun visor when it is in the up position. It cannot recognise the driver's voice if the sun visor is in the down position.

Installation on the steering column

1 Detach the microphone base from the microphone clip by sliding the microphone base while pressing the tab.

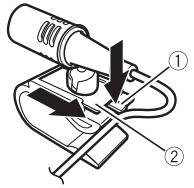

① Tab
② Microphone base

2 Mount the microphone on the steering column.

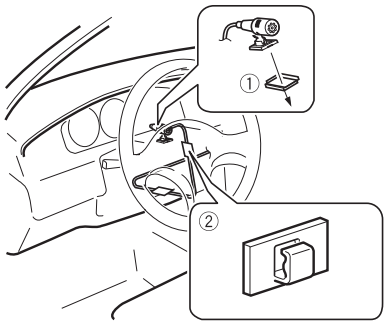

① Double-sided tape
② Clamps
Use separately sold clamps to secure the lead where necessary inside the vehicle.

NOTE

Install the microphone on the steering column, keeping it away from the steering wheel.

Adjusting the microphone angle

The microphone angle can be adjusted.



Trademark · Copyright

- Android, YouTube and Android Auto are trademarks of Google LLC.
- Apple CarPlay and iPhone are trademarks of Apple Inc., registered in the U.S. and other countries and regions.
- Use of the Apple CarPlay logo means that a vehicle user interface meets Apple performance standards. Apple is not responsible for the operation of this vehicle or its compliance with safety and regulatory standards. Please note that the use of this product with iPhone, iPod, or iPad may affect wireless performance.
- The Bluetooth® word mark and logos are registered trademarks owned by Bluetooth SIG, Inc. and any use of such marks by Pioneer Corporation is under license. Other trademarks and trade names are those of their respective owners.
- WebLink® is a registered trademark of Abalta Technologies, Inc.

https://pioneer-car.eu/

PIONEER CORPORATION
28-8, Honkomagome 2-chome, Bunkyo-ku,
Tokyo 113-0021, Japan

PIONEER ELECTRONICS (USA) INC.
P.O. BOX 1720, Long Beach, CA 90801-1720, U.S.A.
TEL: (800) 421-1404

PIONEER EUROPE NV
Haven 1087, Keetberglaan 1, B-9120 Melsele, Belgium/Belgique
TEL: +32 (0)3 570 05 11

Salamanca, Wellington Street, Slough, SL1 1YP, UK
TEL: +44 (0)208 836 3500

PIONEER ELECTRONICS ASIACENTRE PTE. LTD.
No. 2 Jalan Kilang Barat, #04-02, Singapore 159346
TEL: 65-6378-7888

PIONEER ELECTRONICS AUSTRALIA PTY. LTD.
Unit 13, 153-155 Rooks Road, Vermont, Victoria, 3133 Australia
TEL: (03) 9586-6300

PIONEER ELECTRONICS DE MÉXICO S.A. DE C.V.
Blvd. Manuel Ávila Camacho #118, Piso 12, Lomas de Chapultepec,
Alcaldía Miguel Hidalgo C.P. 11000, Ciudad de México
Tel: 52-55-9178-4270

先鋒電子（香港）有限公司
香港九龍長沙灣道909號5樓
電話： 852-2848-6488

© 2024-2025 PIONEER CORPORATION

<KOZZ25F>

<QSG_SPHPF97BTEW_B> EW